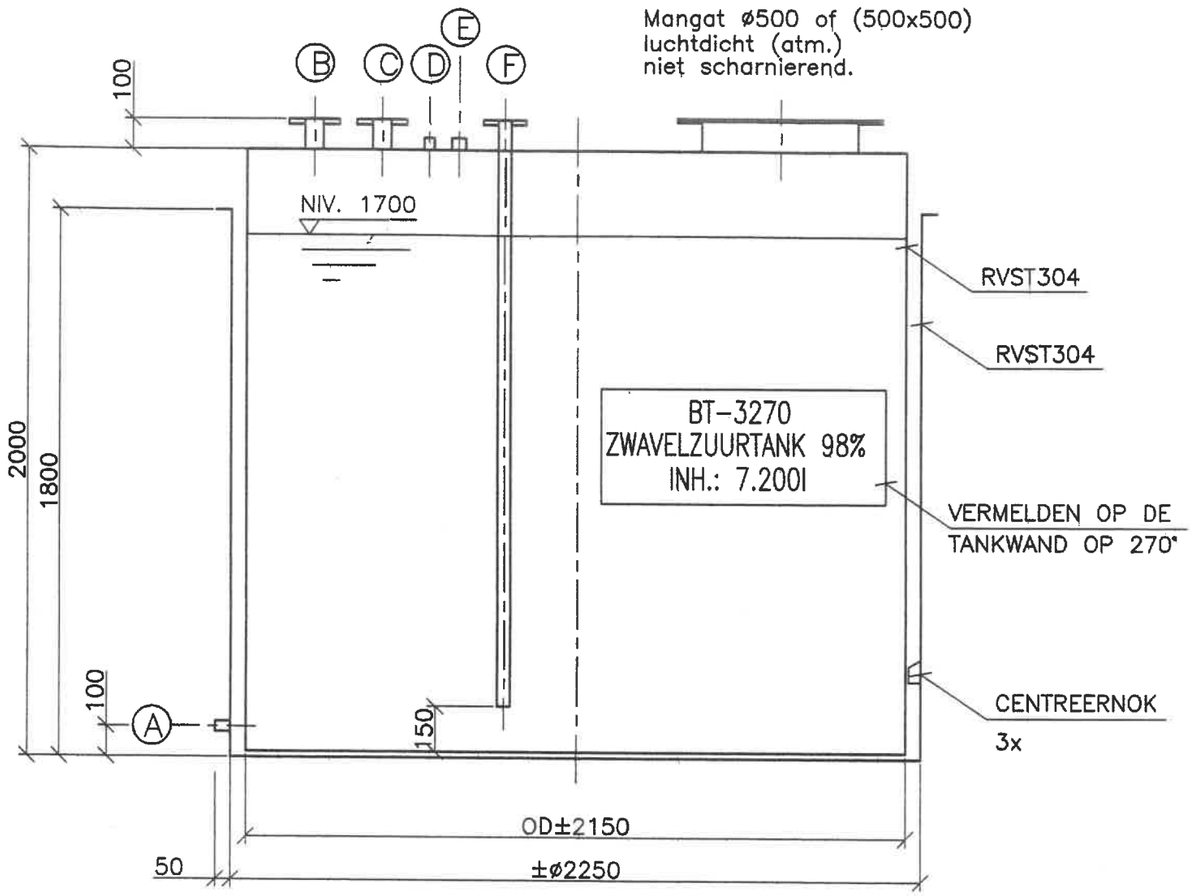

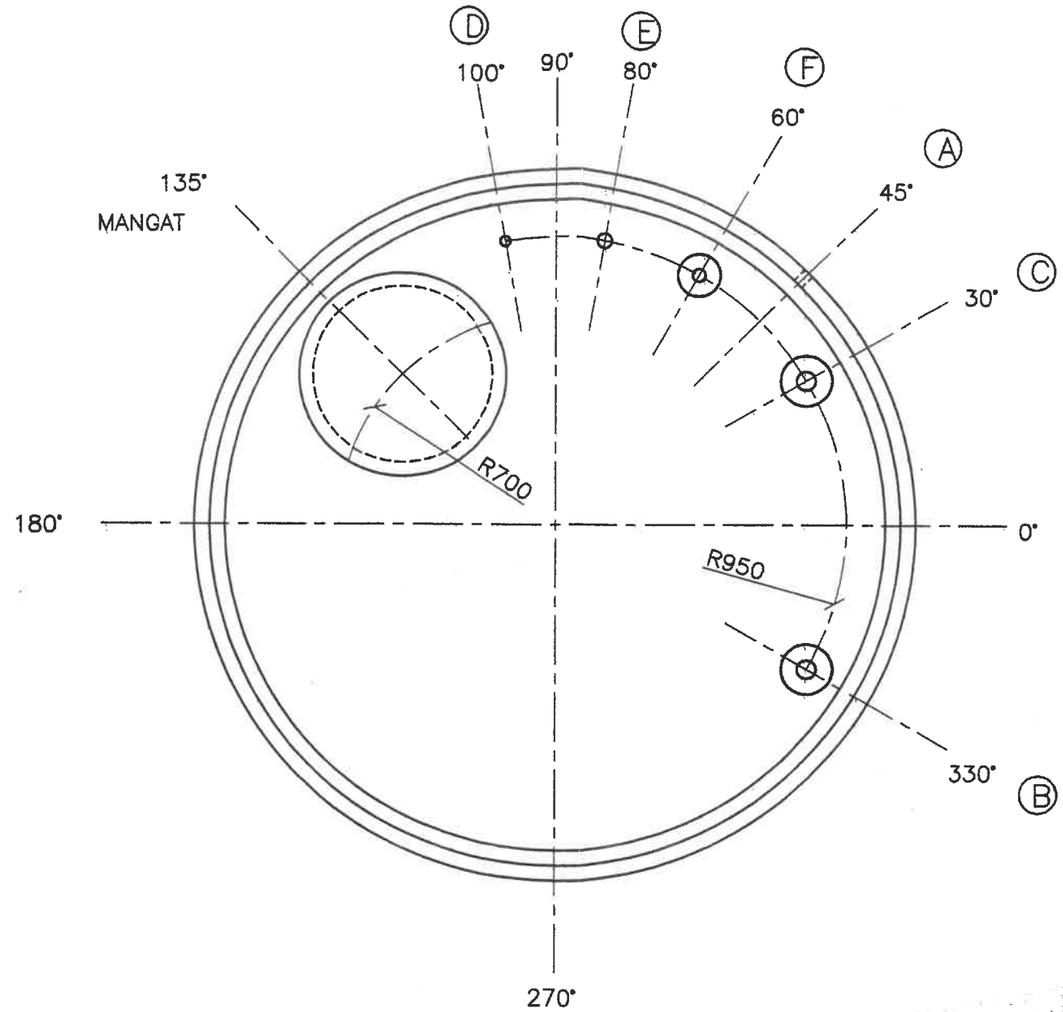

scale: 1/20

Nr	AFMETING	OPMERKING	
A	1" inw.BSP	DRAADMOF	LEKDETEKTIE
B	DN50	FLENS	VULLEIDING
C	DN50	FLENS	ONTLUCHTING
D	1" inw. BSP	DRAADMOF	LSH
E	6/4" inw. BSP	DRAADMOF	LT
F	DN32	FLENS–DIPPIPE	AANZUIG
–	DN500	FLENS+BLIND	MANGAT

biotim

Client:
IGEAN BRECHT

Project:
WATERZUIVERING
COMPOSTERINGSINSTALLATIE DRANCO

This document is the property of BIOTIM N.V. Belgium. It shall not be copied, reproduced: transmitted or communicated to third parties without the explicit agreement of BIOTIM. International Conventions of Berne (1836) – Paris (1908) – Berne (1914) – Rome (1928) – Brussels (1948).

REV.	DATE	DESCRIPTION	ISS.	APP.	REL.
5					
4					
3					
2					
1					
0	25.10.99	GOEDKEURING	WYM	WEW	DWE

ZWAVELZUURTANK 98%
BT-3270 ANSI304

PROJECT No	DRAWING No	REV.
1734	M104	0